Isolation detection

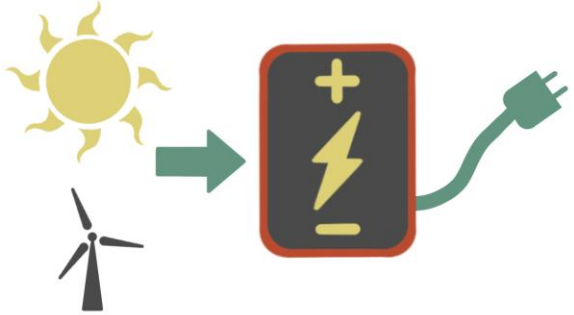

Ania's BMS Course

by Ania Mitros, PhD

© Ania Mitros, PhD, 2024

Battery Management System (BMS) functions

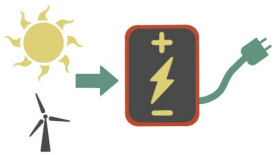

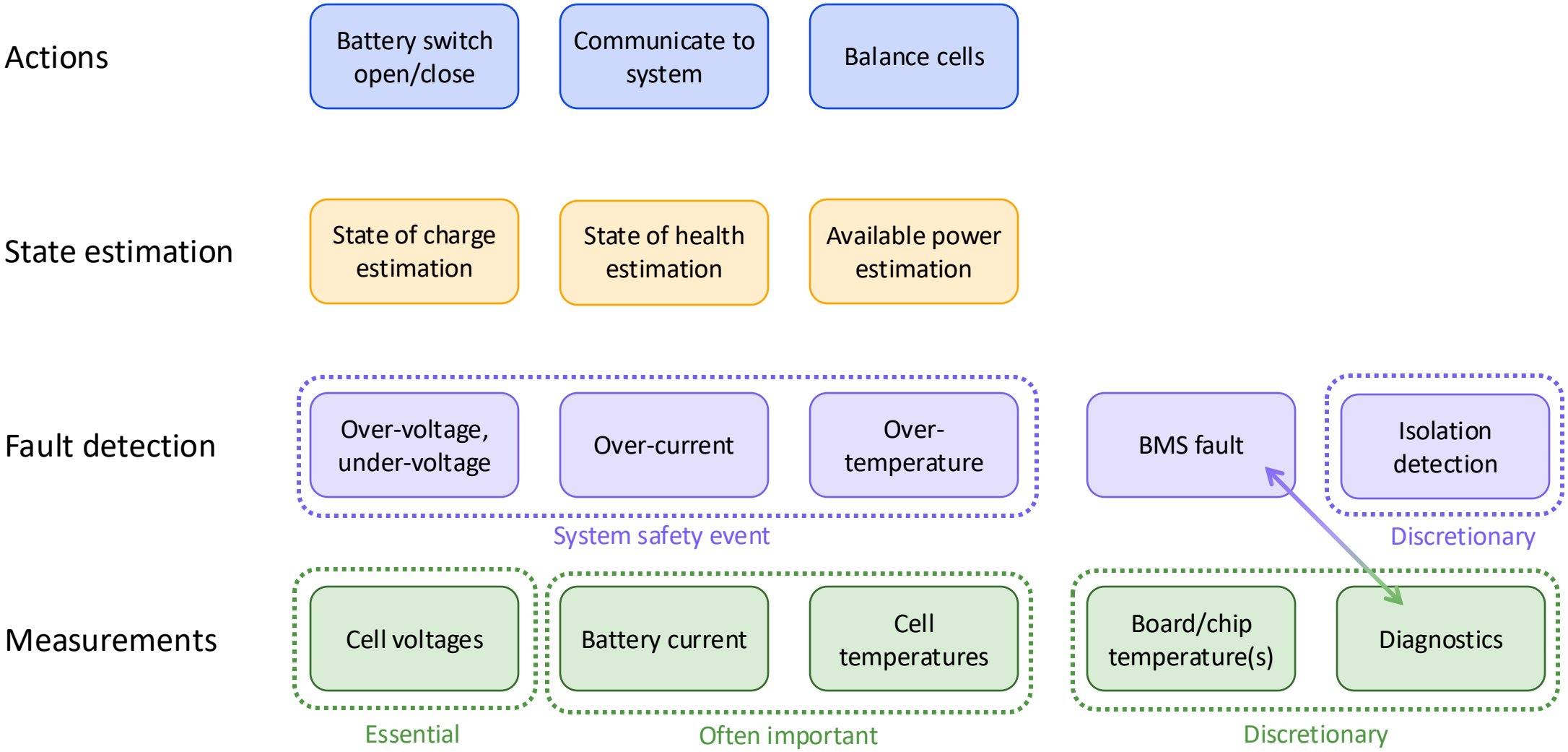

© Ania Mitros, PhD, 2024

Isolation detection in high voltage systems

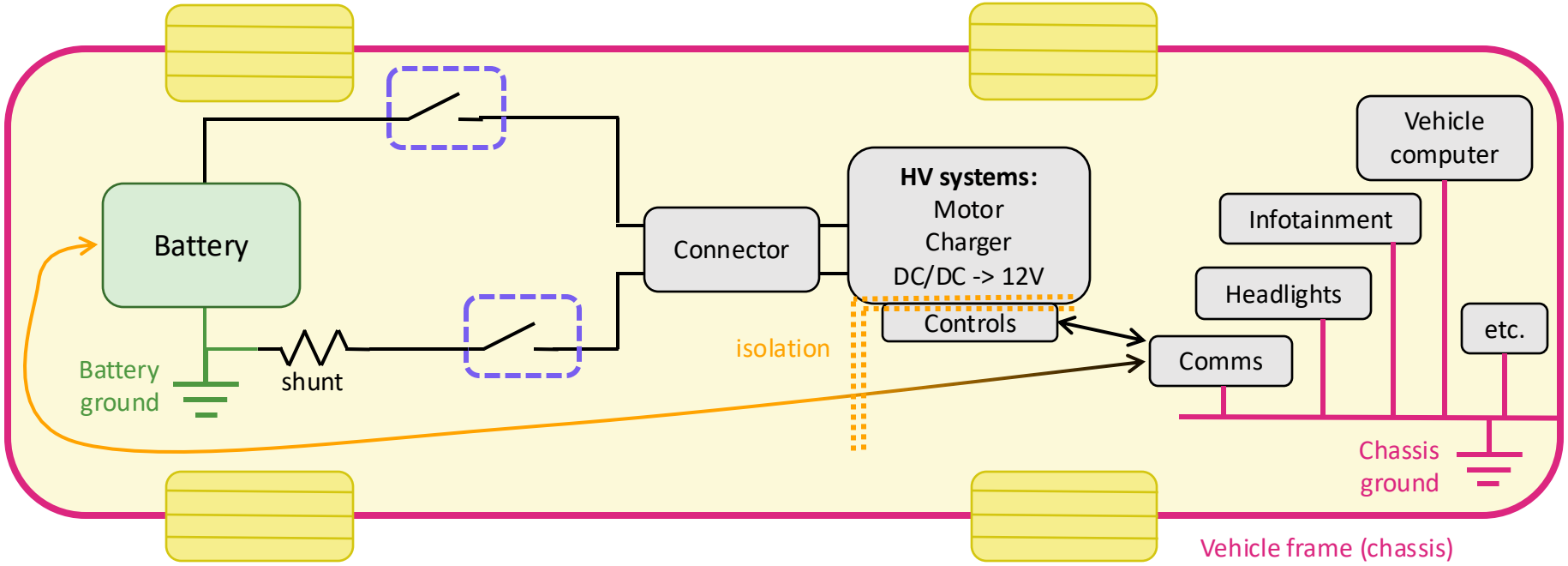

Two switches:
☆ Safety ☆

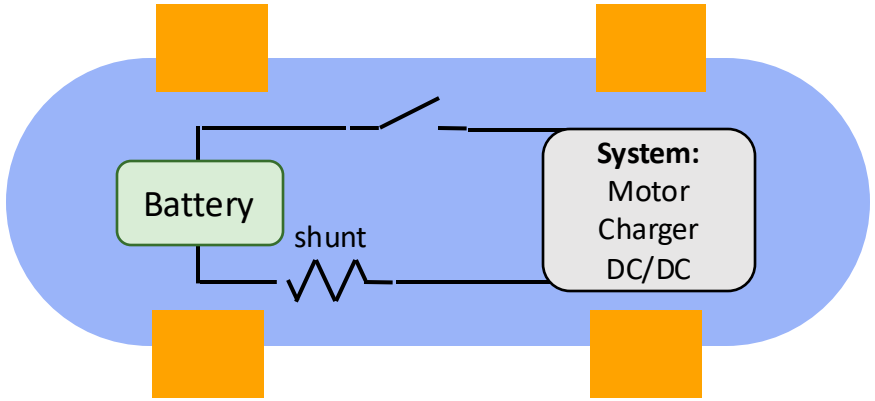

Battery and system grounds are strongly connected via only a small-value shunt resistor.

One switch:
☆ Don't drain battery ☆

© Ania Mitros, PhD, 2024

Why bother?

Isolation requires:

- Second high-voltage high-current switch
- Isolation (caps, transformers) on all comms across isolation
- Secondary power source for vehicle systems

☆ Safety ☆

© Ania Mitros, PhD, 2024

What fault are we worried about?

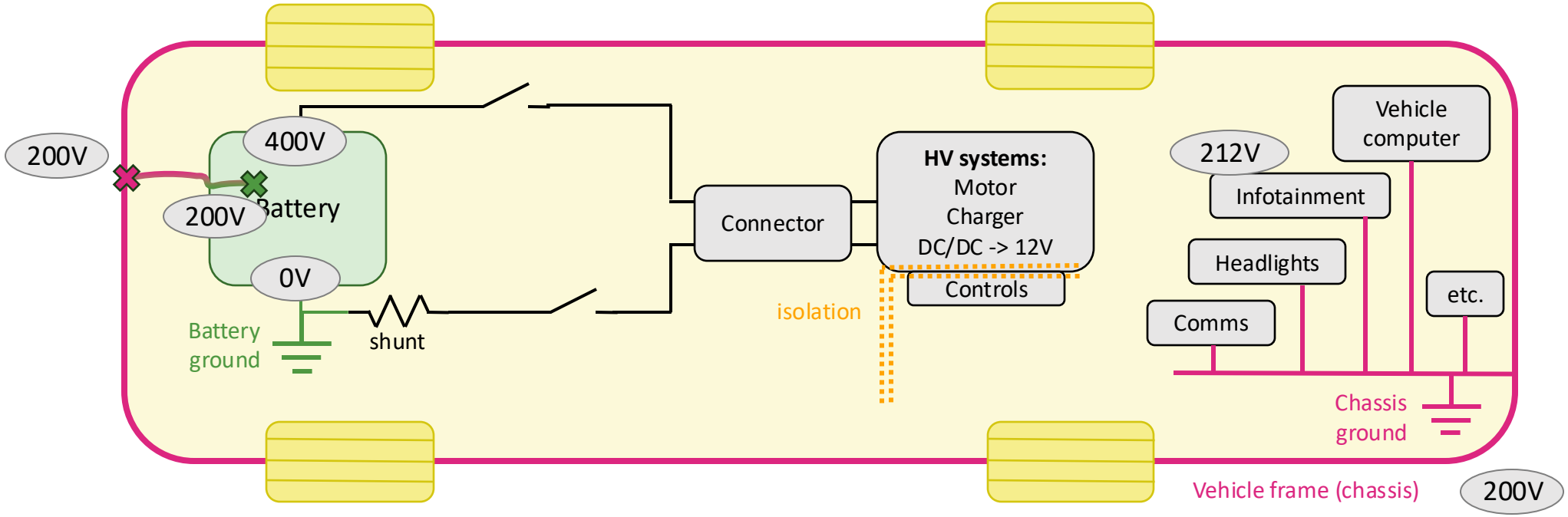

© Ania Mitros, PhD, 2024

When contactors close…

Pause & Think

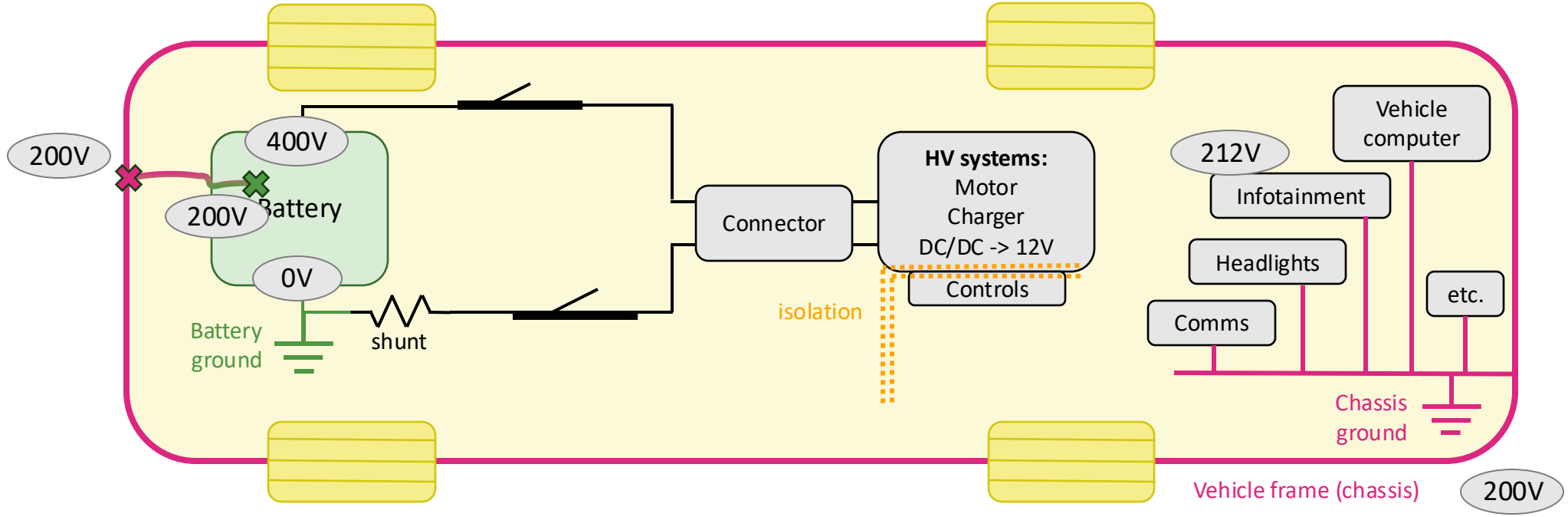

…nothing much happens

Fault can persist.

© Ania Mitros, PhD, 2024

Here’s the problem

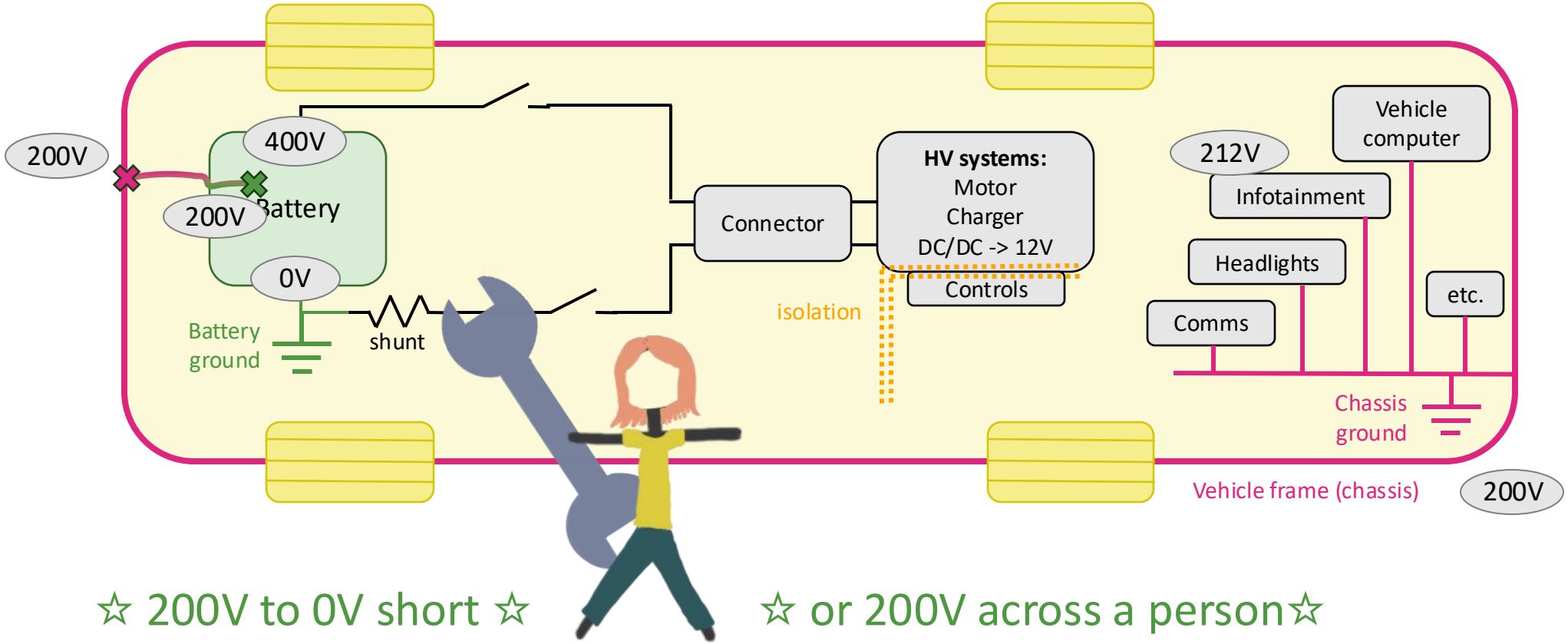

☆ 200V to 0V short ☆ ☆ or 200V across a person☆

© Ania Mitros, PhD, 2024

Here’s another problem

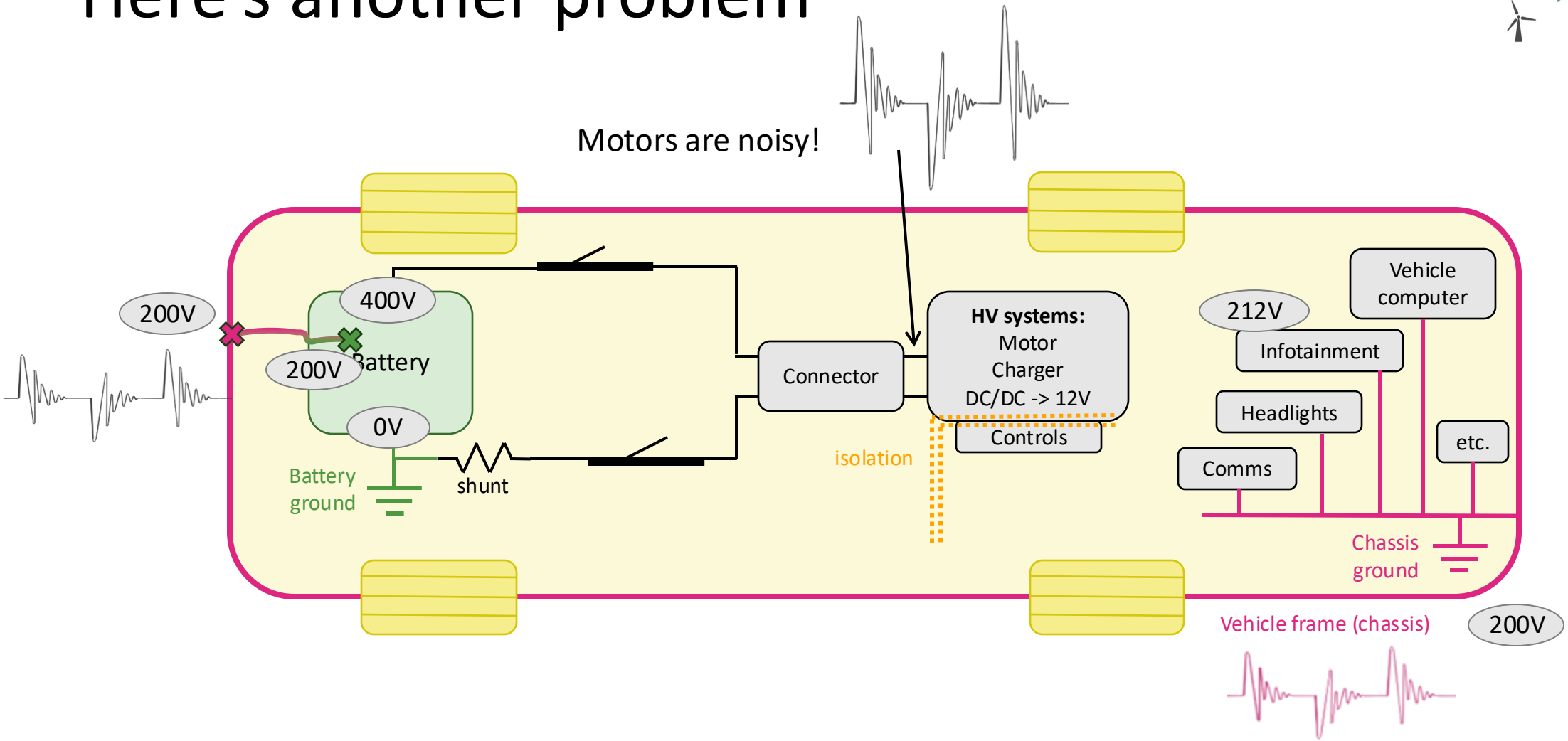

And we have ground noise

→ Erratic behavior

© Ania Mitros, PhD, 2024

Isolation detection : Idea #1

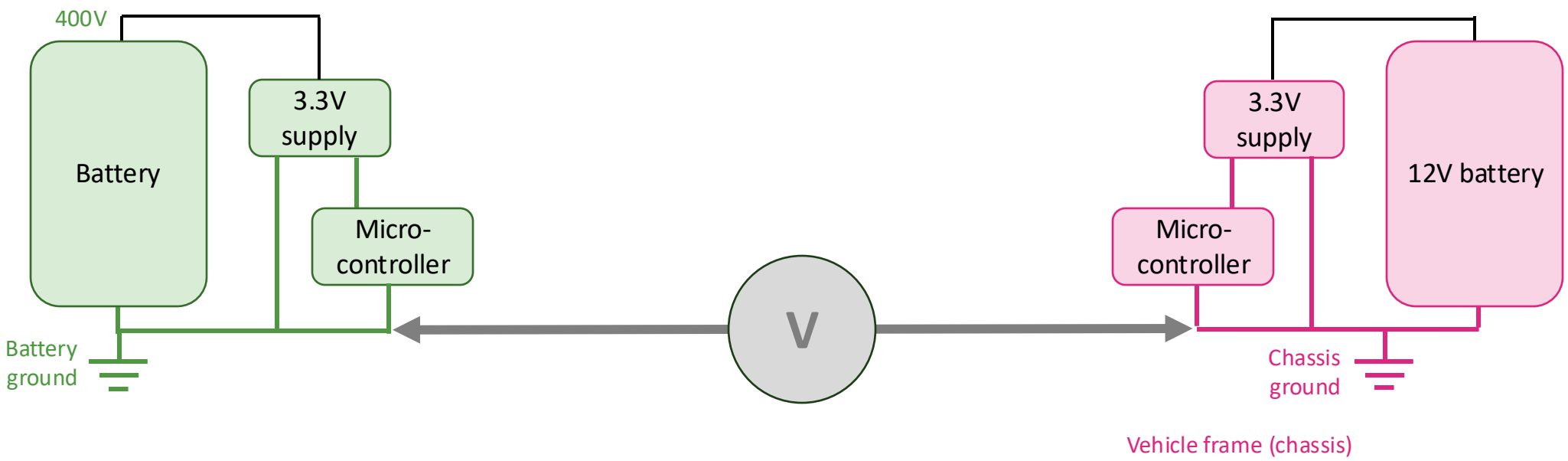

Voltage difference is undefined for fully isolated nodes

© Ania Mitros, PhD, 2024

Isolation detection: Idea #2

Define the voltage difference

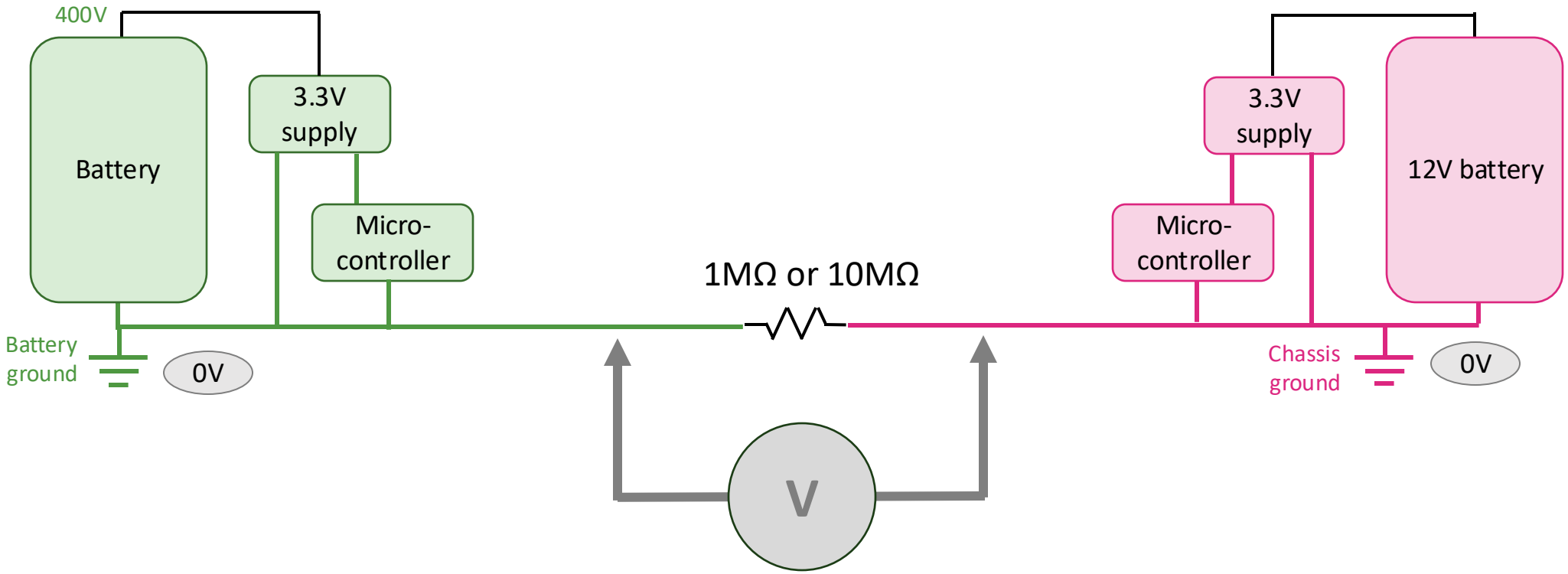

Intact isolation: 0V

© Ania Mitros, PhD, 2024

Isolation detection: Idea #2

Define the voltage difference

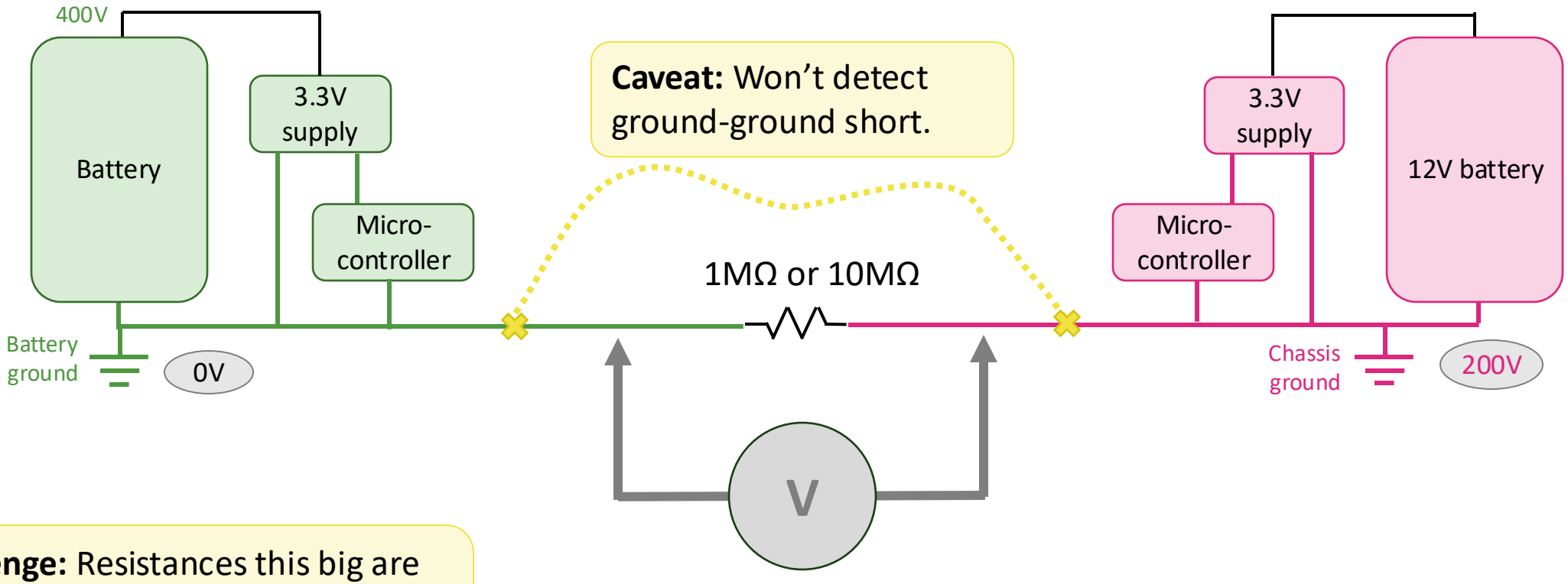

Isolation fault example: 200V

Challenge: Resistances this big are similar to expected parasitic resistance on normal PCB.

© Ania Mitros, PhD, 2024

Isolation detection: Idea #3

Perturb the voltage difference

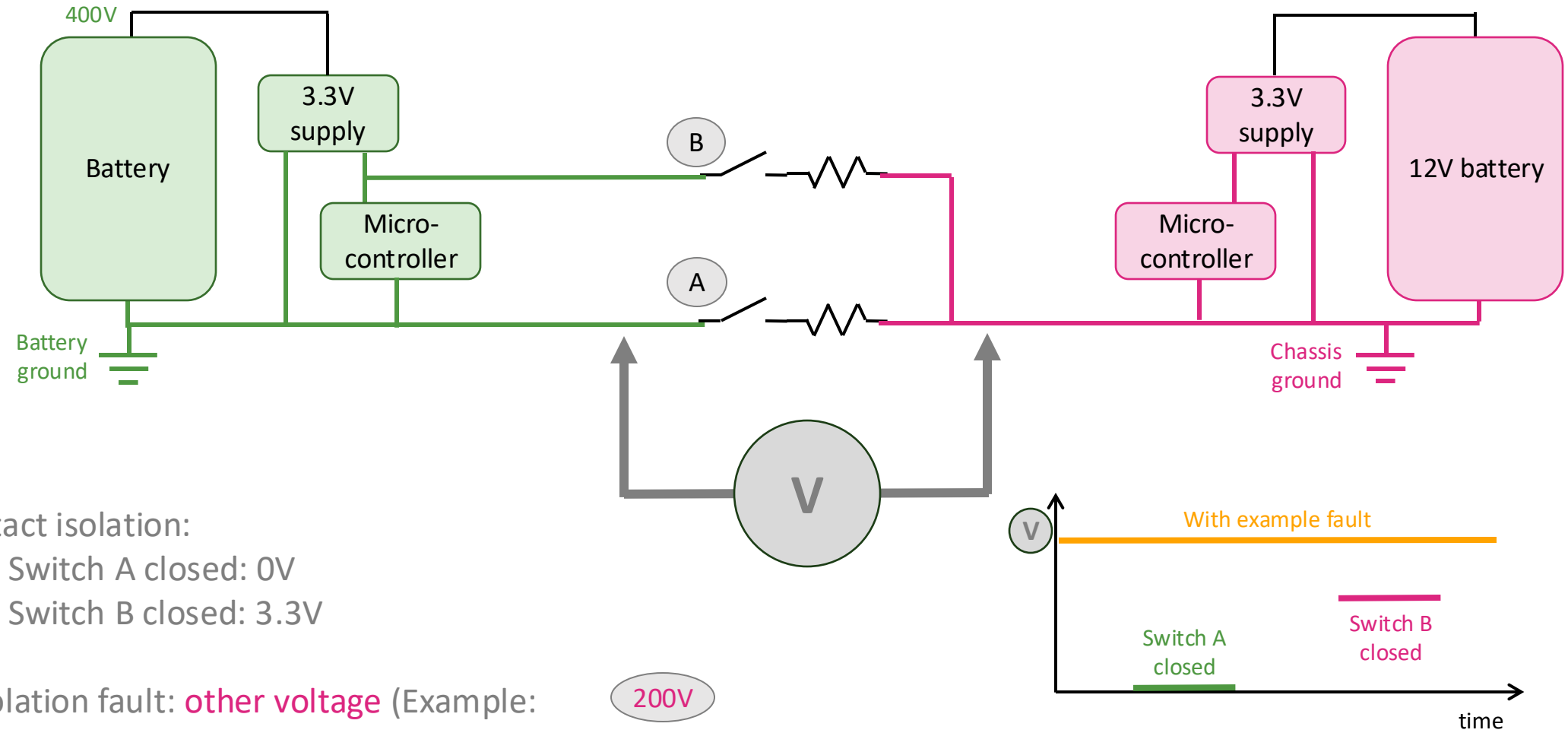

Intact isolation:

- Switch A closed: 0V
- Switch B closed: 3.3V

Isolation fault: other voltage (Example: 200V

© Ania Mitros, PhD, 2024

Isolation detection: Idea #3 Generalized

Perturb the voltage difference

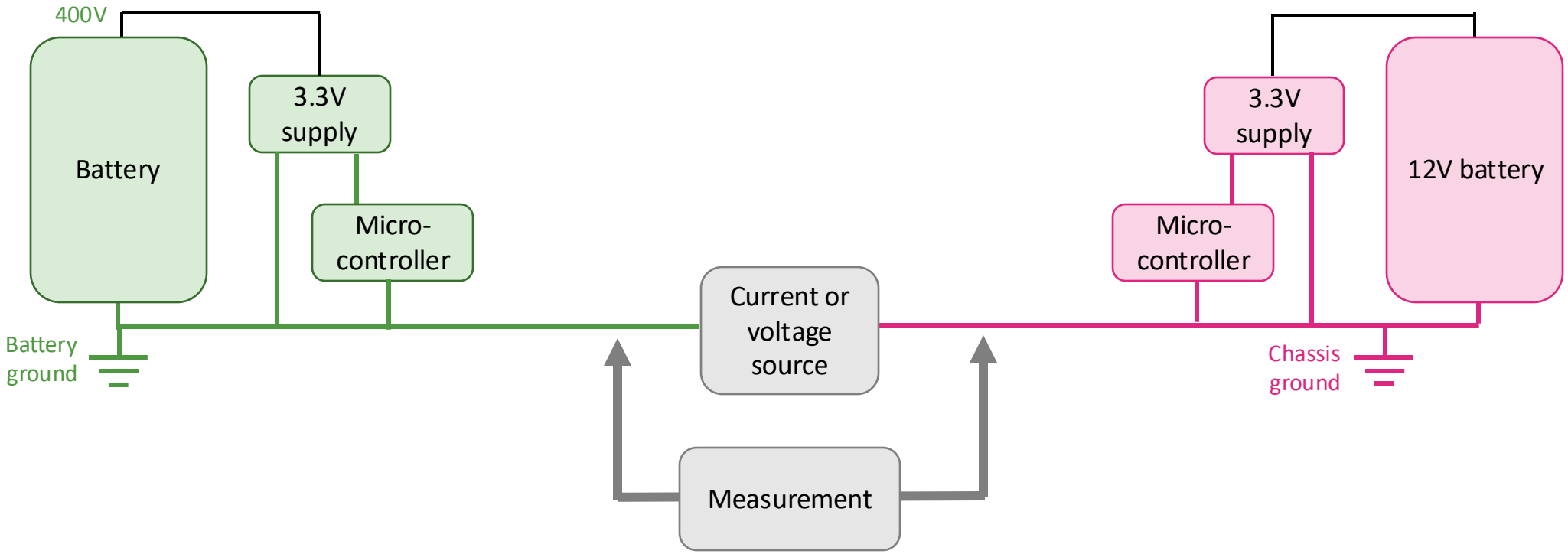

1. Perturb the system
2. Measure to confirm expected behavior

© Ania Mitros, PhD, 2024

Summary

- Isolation detection is a safety function.
  - → Important in high voltage systems.
  - → May be unnecessary in low voltage systems.

- Without isolation detection, a short between the battery domain and the system ground domain may not detectably affect system behavior.

- An isolation detection circuit fundamentally perturbs the system to a known state, and then measures to confirm the expected known state.

➢ Next: Some nuances

© Ania Mitros, PhD, 2024

Parasitic capacitances

Voltage between battery ground and chassis ground is defined by parasitic capacitances

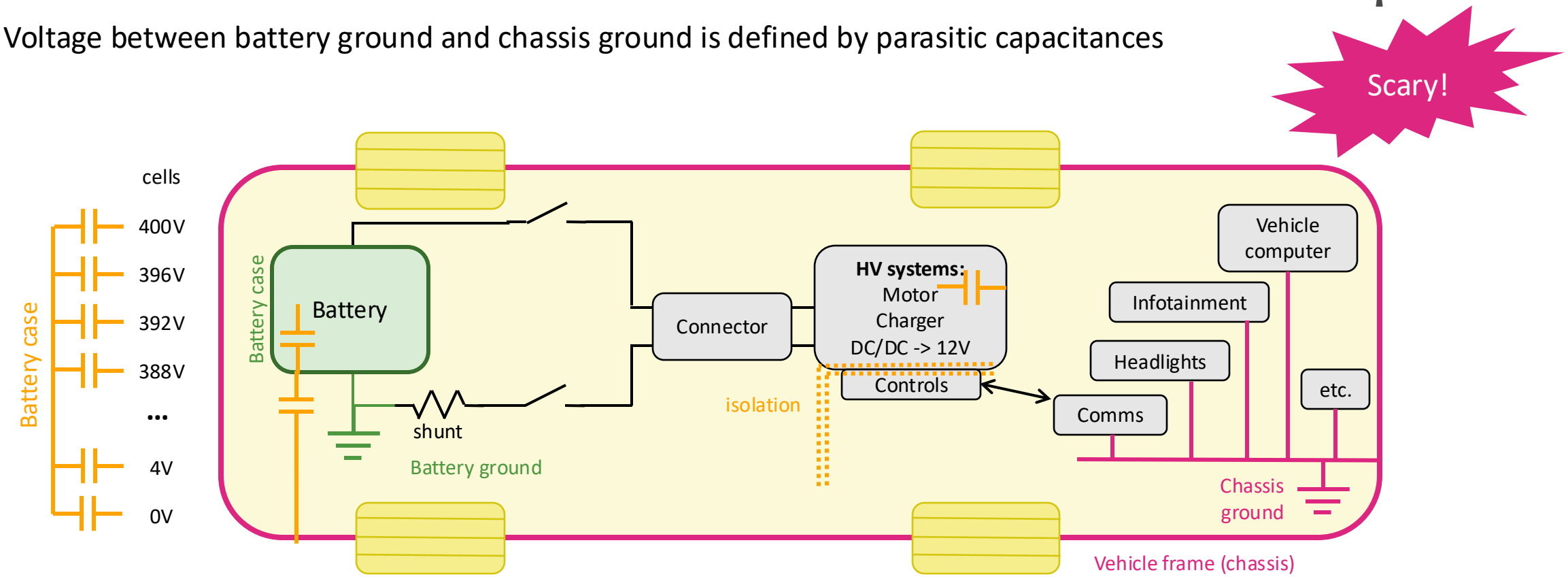

1. Battery to battery case
2. Battery case to vehicle chassis
3. Motor windings to motor case

© Ania Mitros, PhD, 2024

Define the voltage between grounds

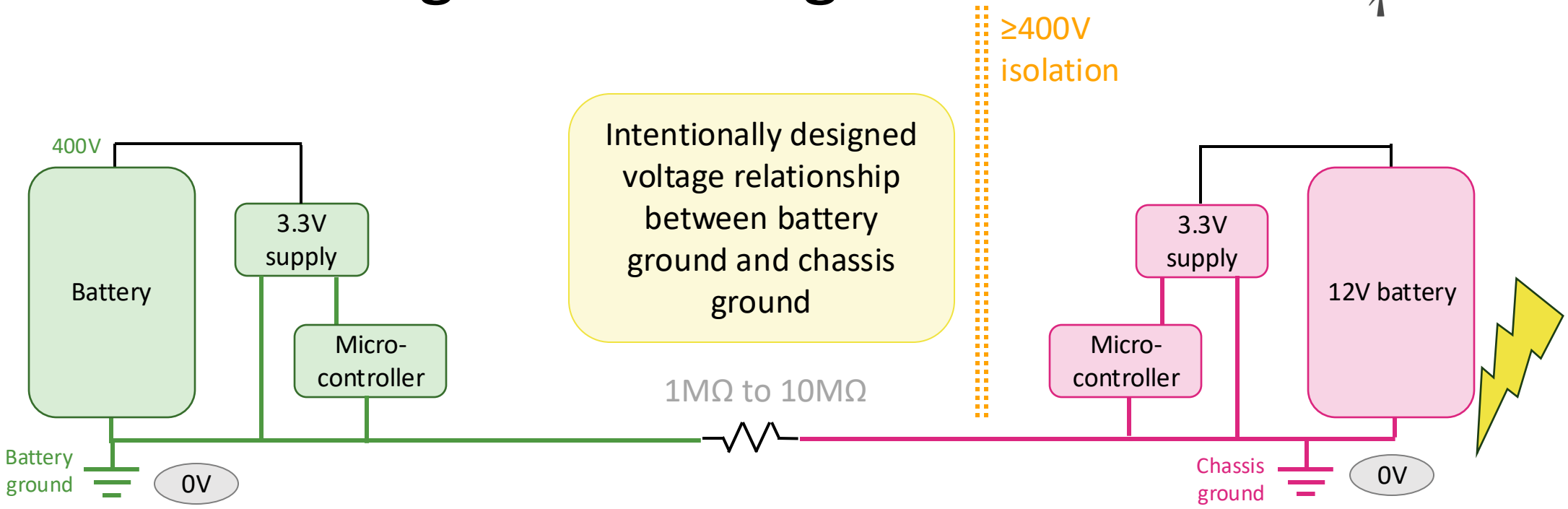

Value: Robustness to electrostatic build-up and other parasitic voltage disturbances

© Ania Mitros, PhD, 2024

Impact of capacitance on isolation detection

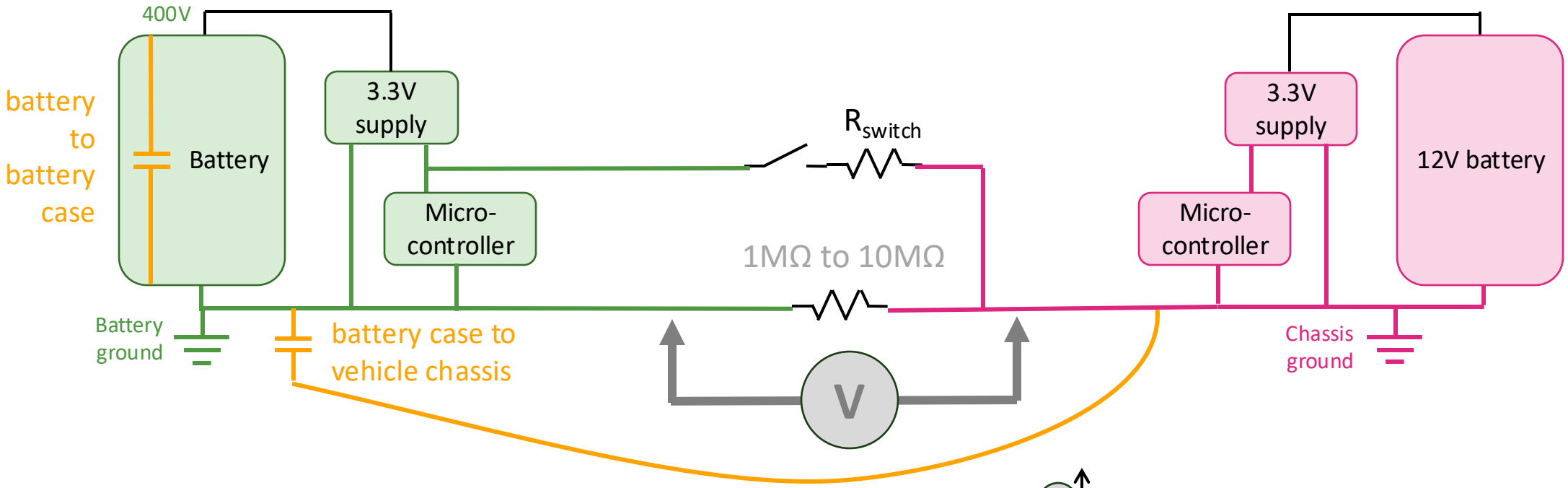

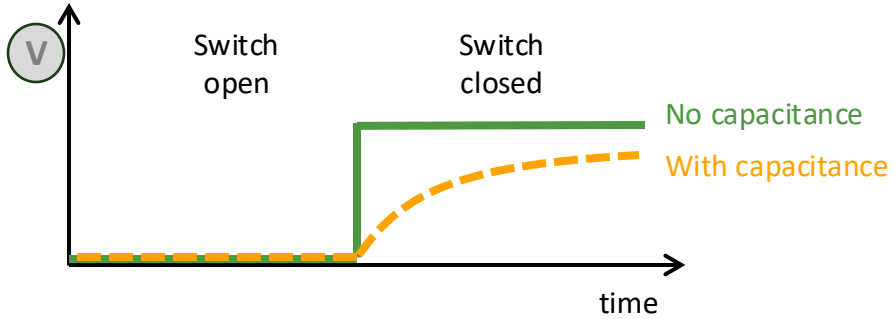

Diagnostic voltage measurement delay to allow signal to settle.

→ Strong enough stimulus

→ Breaks isolation during diagnostic

© Ania Mitros, PhD, 2024

~~Parasitic capacitance~~s Designed capacitances

Voltage between battery ground and chassis ground is defined by parasitic ~~capacitan~~ces
intentionally chosen

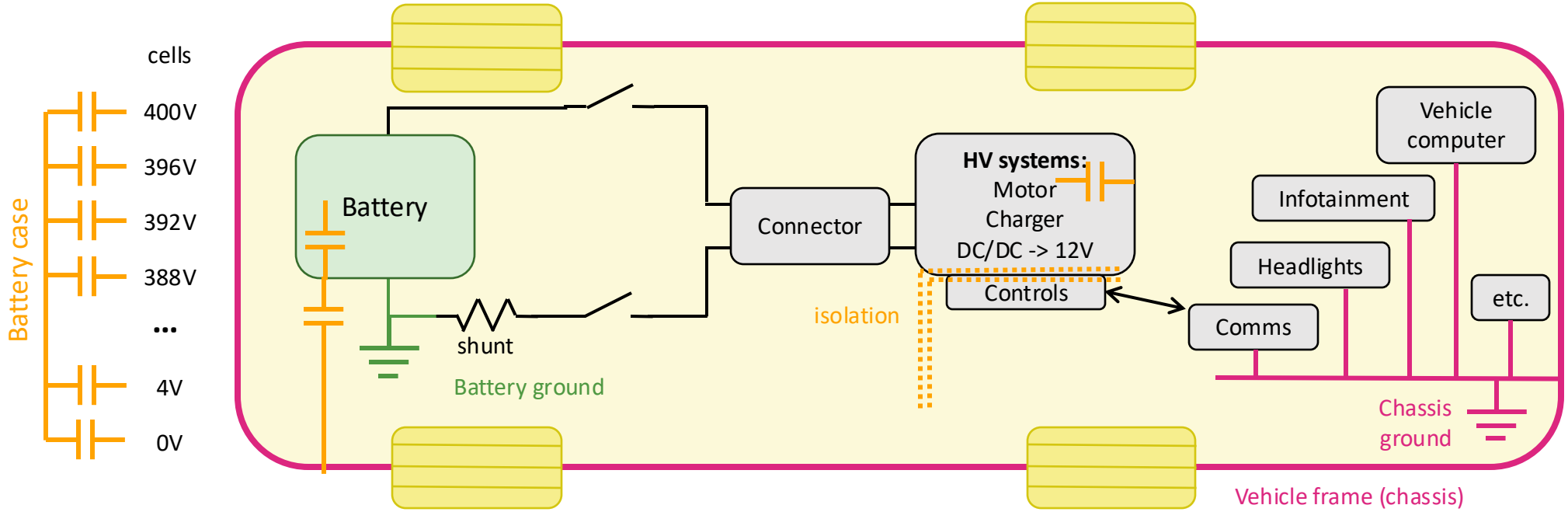

1. Battery to battery case
2. Motor windings to motor case
3. Motor windings to motor case
4. Intentional components: Y caps and X caps

© Ania Mitros, PhD, 2024

X and Y capacitors

Voltage between battery ground and chassis ground is defined by **X and Y capacitors**

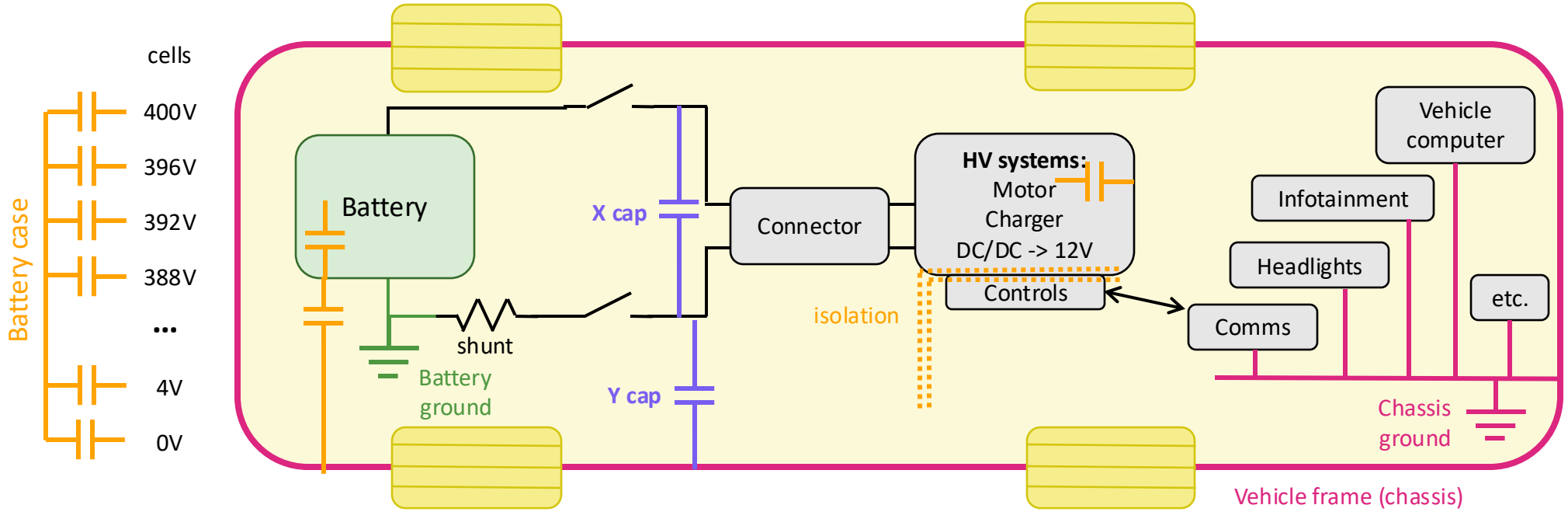

1. Battery to battery case
2. Motor windings to motor case
3. Motor windings to motor case
4. Intentional components: Y caps and X caps

X caps: Line to line

Y caps: Line to ground

$C_X > C_{parasitic}$
$C_Y > C_{parasitic}$

© Ania Mitros, PhD, 2024

Summary

- Parasitic capacitances affect voltage between battery and chassis ground
  - → Scary!
  - → Parasitics vary unpredictably

- A resistor between battery and chassis grounds sets the DC point, and also dissipates electrostatic charge accumulation

- Large capacitance affects the timing of the isolation detection diagnostic.

- Explicit capacitors can set predictable, known behavior.
  - Known as X caps and Y caps
  - → Also, help filter system noise

© Ania Mitros, PhD, 2024

The End

An Ania Mitros, Ph.D. lecture

© Ania Mitros, PhD, 2024